EMG

Strip guiding systems
Hydraulics

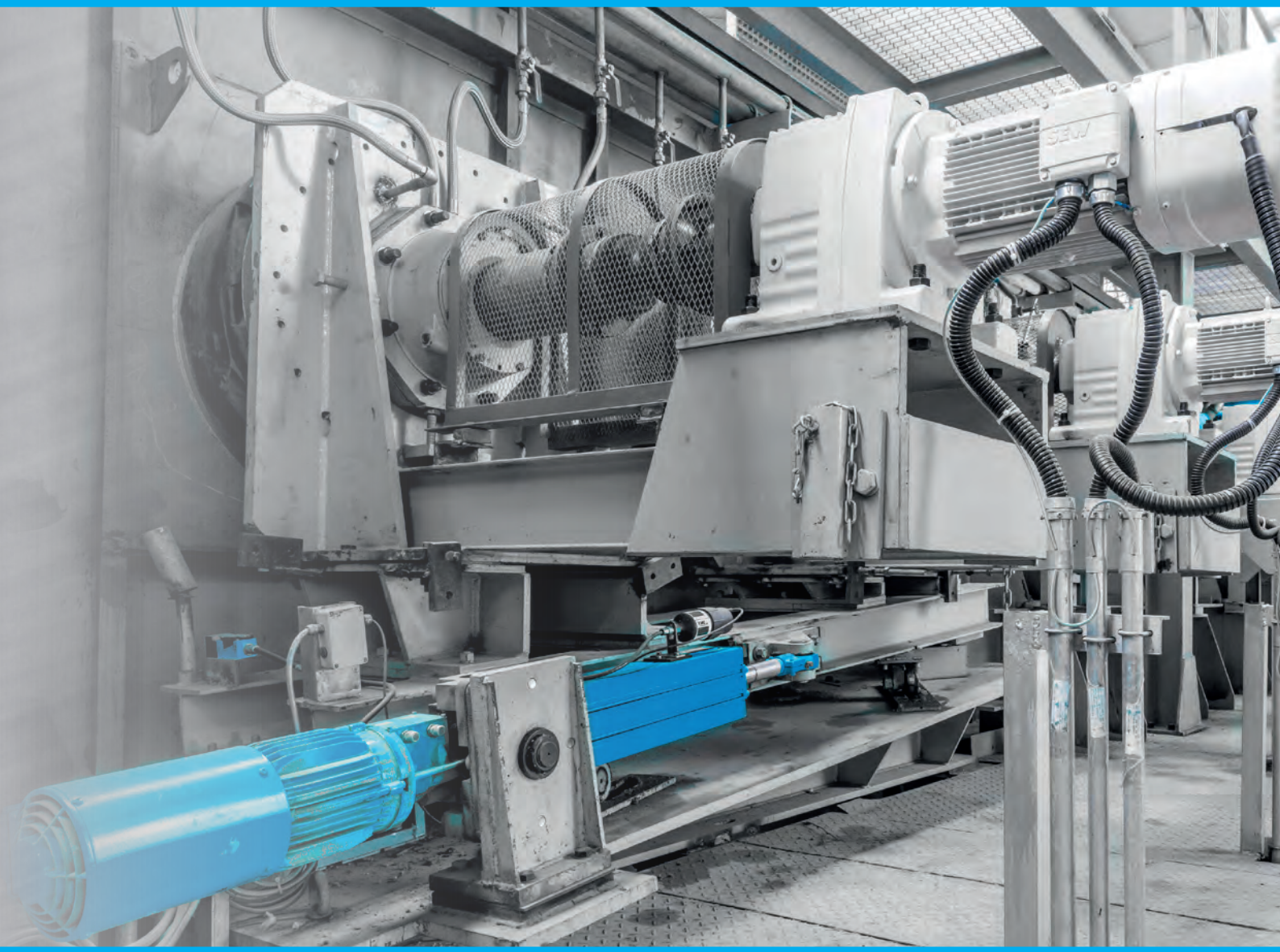

- long life-time
- high reliability
- huge performance range

Hydraulic control HR/HA

Hydraulic strip guiding system:

The hydraulic control unit HR and the hydraulic power unit HA reliably generate hydraulic energy for any power range. A hydraulic control unit HR is a hydraulic power unit HA with a proportional valve that controls the volume flow of the fluid.

For strip guiding systems, hydraulic power units with a rating of between 0.55 and 18.5 kW are normally used.

Standard hydraulic power units basically consist of an oil tank, a motor/pump assembly and a filter. Pressure-regulated pumps with variable flow rates are used.

If cooling is required, either air or water cooling may be used.

Customer benefits of HR/HA:

- hydraulic energy for any power range
- power units can be tailor-made for coilers that require extreme capacities
- high level of reliability in all areas of application
- monitoring device (level, temperature, pressure) integrated
- protection of the components from contaminants in the hydraulic oil via special filters is guaranteed
- customer specific design and optimization

Hydraulic control HR/HA

Design/functional principle of HR/HA:

The hydraulic control unit as a component of the elec-tro-hydraulic control circuit converts the electronic control signals into movement of the hydraulic cylinder.

The motor/pump combination converts electrical energy into hydraulic energy. The operating pressure is maintained at a constant level by the pressure regulator on the variable flow rate pump.

The oil pump delivers a volume flow of oil to the elec-tro-hydraulic proportional valve (e. g. 4-way-servo valve).

In the event of a continuously increasing modulation of the proportional valve, an increasing quantity of oil flows to the actuator (e.g. hydraulic cylinder) after exceeding the dead zone. The actuator converts this oil flow into movement and the pressure medium displaced at the outlet side is fed to the storage tank via the proportional valve in a depressurised state. The filters (10 µm pressure filter and air filter) provide protection for the hydraulic components and prevent contaminants entering the hydraulic oil. The operating pressure and maximum flow rate are factory-fixed depending on the model. The signals of the monitoring equipment can be found in the terminal box.

Accessories for HR/HA (optional):

- standby motor/pump assembly
- oil tank and piping in stainless steel
- heater

EMG Automation GmbH specialises in the automation of continuous production processes in the metal, paper and plastics industries as well as in the foil and tyre industries. The company, which was established in 1946, is a leading provider of electro hydraulic control systems. Furthermore, EMG provides quality assurance systems for the manufacturing industry.

Based on the combination of more than 60 years of experience, the quality of our products and complete solutions as well as our advisory skills, our customer, by his trust, makes us the market leader. By working in close co-operation with our customers, research facilities and universities we are continuously searching for innovative solutions to promote our new and enhanced products and therefore to actively shape the market as a leader in innovation.

Hydraulic component

Hydraulic component - servo valve:

Servo valves are the most important components in any electro-hydraulic control system. Our rotary slide design with gap adjustment ensures minimum friction loss, high repetition accuracy and a wide power range for single-stage valves.

Based on our extensive experience with industrial applications and control hydraulics we decided to equip the valves with a manual operating mechanism for functional control and for setting procedures.

An additional feature that is focused on practical application is the ability to conduct a cleaning flush during operation without any oil escaping.

EMG servo valves are characterized by an especially high degree of reliability and ease of service.

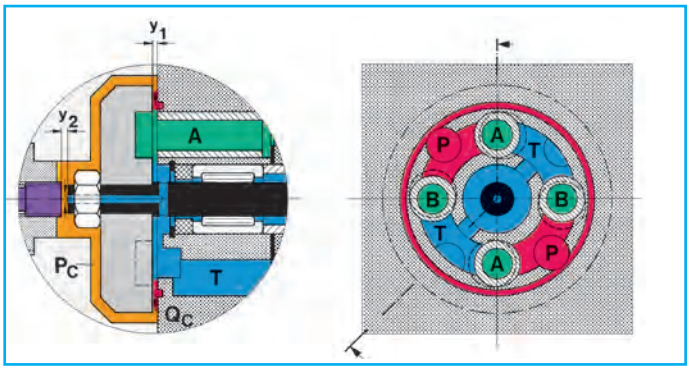

Left: View of rotary slide with standard leak gaps Y1 and Y2
Right: Frontal view of hydraulic block

Functional principles - servo valve:

Type SV1-10:
A torque is produced at the armature by a direct control current in the exciter windings. The size and direction of this torque are proportional to the control current and turn the armature, against the force of the centring springs, from its neutral position. As a result, the rotary slide fixed on the same shaft is also rotated; the blind holes in it create a continuously increasing connecting area between circular duct sections and consumer connections. The rotary slide, enclosed by its sealing cover, floats at a defined leak gap Y1 on an oil film, above the leading edge sealing surface (graphic top right).

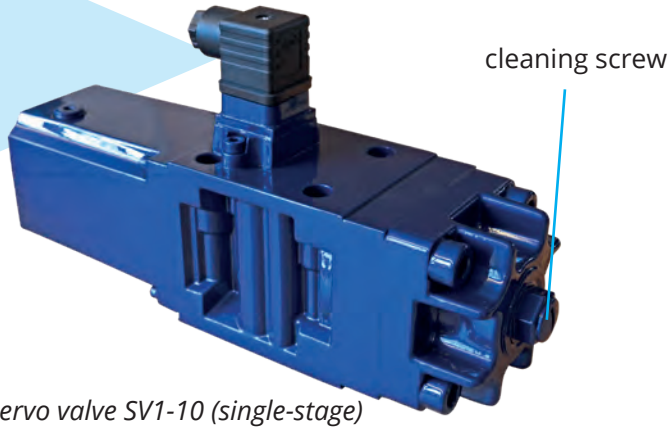

Servo valve SV1-10 (single-stage)

Type SV2-16:
A pilot valve SV1-10, which is suitable for pressure control, is placed on a valve block. Together with the main valve, which contains a piston slide valve, an inductive position transducer as well as a control amplifier, a closed control system is realized.

Via the internal lines of the pilot valve the piston slide valve is pushed with pressure against the spring force. By this the hydraulic fluid is led to the operating lines A or B. The inductive position transducer meanwhile monitors the position of the main control piston. The volume flow is determined by the position of the piston slide valve and is proportional to the input current of the control amplifier.

The piston is held in the middle position by two pressure springs, e. g. in case of power breakdown.

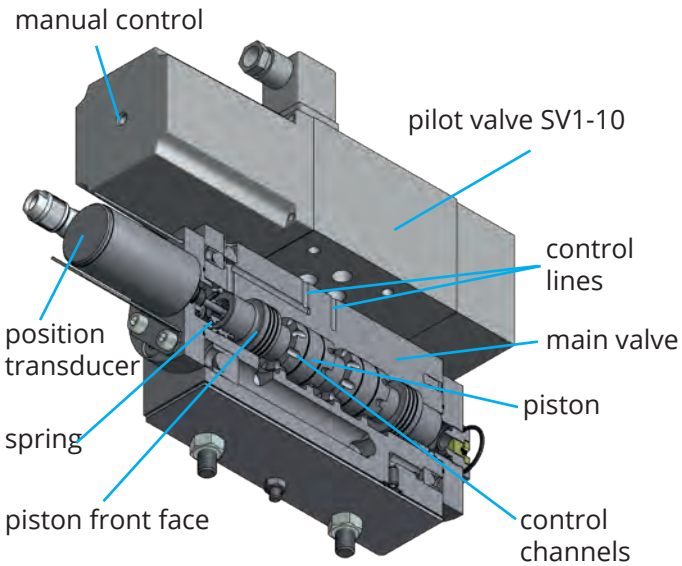

Servo valve SV2-16 (double-stage)

servo valve SV

Technical features - servo valve:

- temperature- and pressure-independent zero point stability
- practically constant dynamics (almost independent of pressure and drive)
- large control distances, long service life, low leakage flow
- mechanical manual/emergency control and external performance monitoring
- spring-centred rotary slide (zero position in the event of an electrical power failure)
- standard connections, standard plug

Customer benefits - servo valve:

- cleaning flush of the valve during operation
- also suitable for low pressure levels
- single- and double-stage construction depending on the needed volume flow (SV1-.../SV2-...)
- guaranteed minimum friction losses
- high repetition accuracy
- huge range of performance for single- and double-stage valves
- high level of reliability
- extremely easy to service

Technical characteristics (e. g. SV1-10):

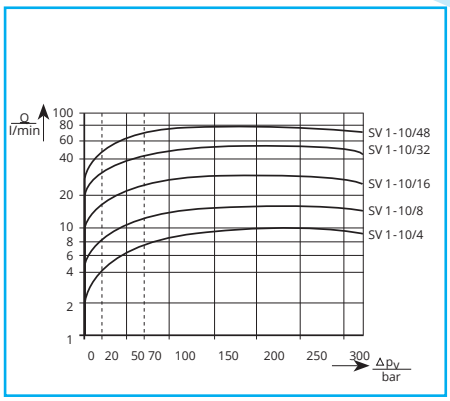

Relationship of flow rate to valve pressure drop at rated motion

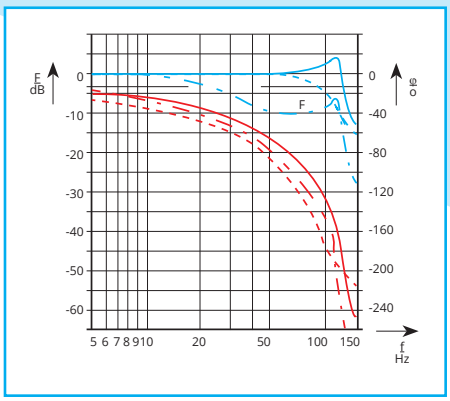

Frequency response p_S = 200 bar
I / I_N = 10 % - - - -; 30 % ——; 100 % — · -

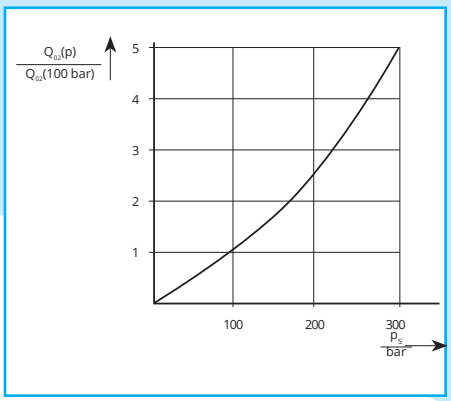

Relationship of leakage flow rate to operating pressure

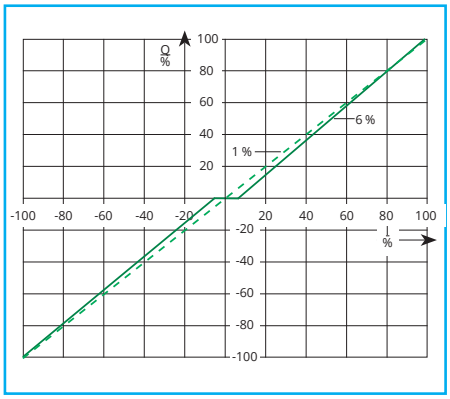

Flow rate curve
(Overlap 1 % resp. 6 %)

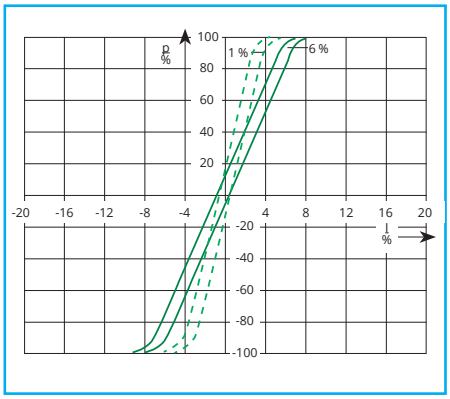

Pressure curve
(Overlap 1 % resp. 6 %)

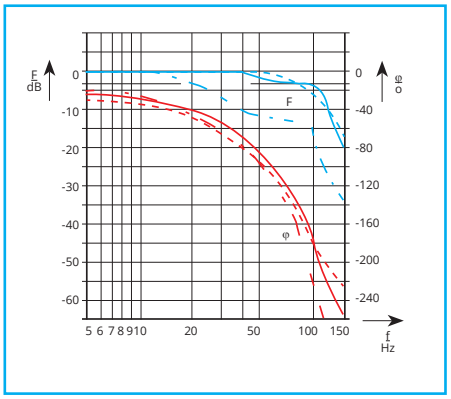

Frequency response p_S = 20 bar
I / I_N = 10 % - - - -; 30 % ——; 100 %

Technical characteristics of other types on request/see data sheet.

Hydraulic control system HST

Design/functional principle of HST:

Additional proportional valves can be provided depending on the application of the HST hydraulic control system within a strip guiding system, e.g. for controlling a pressure roll and/or an immersion roll.

In contrast to the HR hydraulic control unit, the HST hydraulic control system is not equipped with its own oil pump. Instead, the flow rate of oil is generated via the existing central hydraulic system or an additional HA hydraulic power unit.

Also at the hydraulic control system an increasing quantity of oil flows to the actuator after exceeding the dead zone, in the event of continuously increasing modulation of the proportional valve. The actuator converts this oil flow rate into movement and the pressure medium displaced at the outlet side is fed to the storage tank via the proportional valve.

Facilities HST:

- intermediate measuring plate with Minimess connection
- drip oil collecting pan

Accessories for HST (optional):

- pressure filter as intermediate plate filter or integrated in the piping
- interlocking valves
- manometer
- terminal box
- shut-off valves in the lines
- pressure switch
- emergency and block valve "block and bleed"
- connections according to customer (e. g. flanges)
- reservoir
- pressure control valve

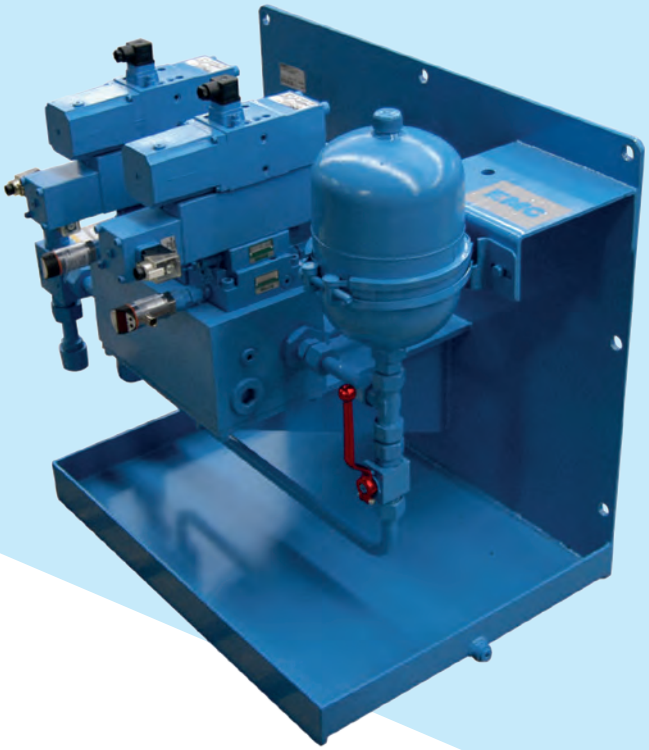

Customized special solution

Hydraulic control system HST

Compact hydraulic control system:

An HST hydraulic control system is used wherever installation space is at a minimum. Therefore it can even be used in close proximity to the hydraulic cylinder. The HST system is then supplied by the central hydraulic unit or an hydraulic power unit (HA).

The main component of the hydraulic control system is the EMG servo valve. A wide variety of expansion options enable customized solutions (e. g. emergency and block valve "block and bleed").

Customer benefits of HST:

- compact hydraulic control
- low space requirement
- use in close proximity to the hydraulic cylinder
- customer specific design and optimization
- high level of reliability in all areas of application
- protection of the components from contaminants in the hydraulic oil via special filters is guaranteed

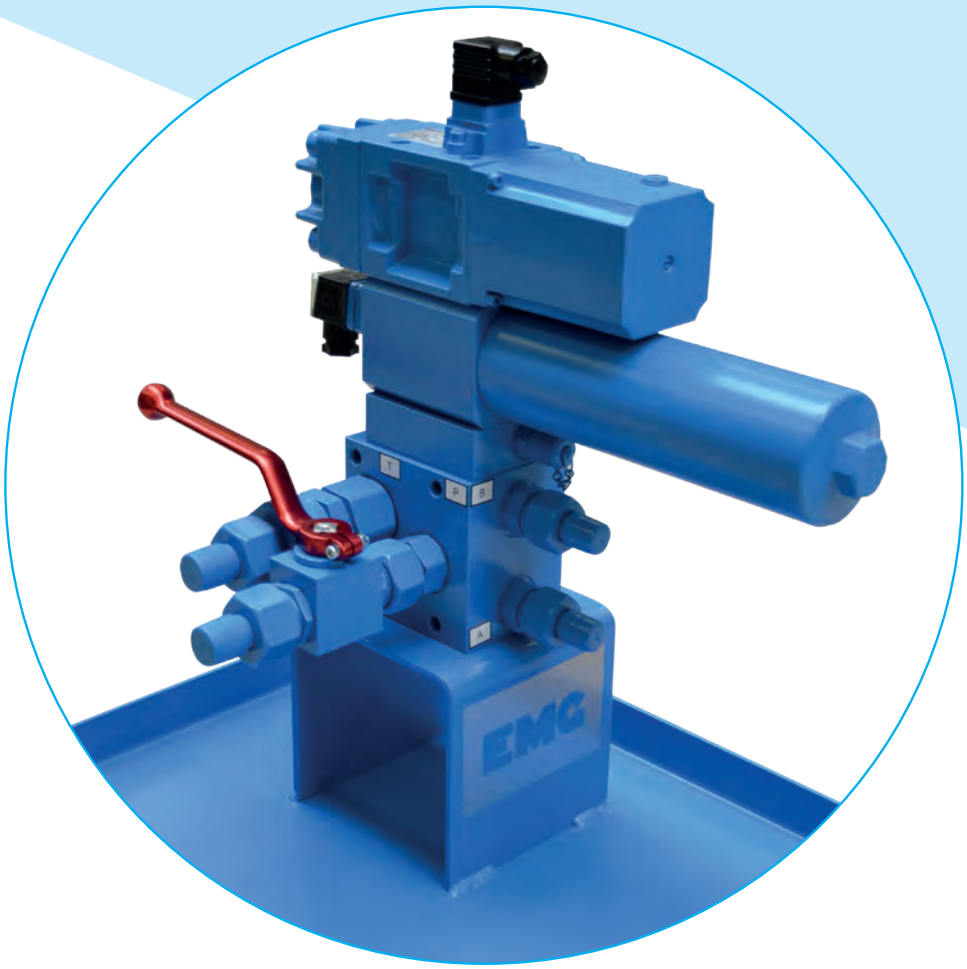

EMG Automation GmbH
Industriestraße 1
57482 Wenden
Germany

Phone: +49 2762 612-0
Fax: +49 2762 612-384

automation@emg-automation.com
www.emg-automation.com

member of ELEXIS

EMG / A-V / EN / Hydraulik / Revision 00 / 02-2022 / Printed in Germany / Subject to modification